KOHLER®

Roughing-In

K-T195, K-T197, K-T199
FALLING WATER
WALL-MOUNT FAUCET

Product Information

Applicable product*:	
7-1/4″ (18.4 cm) length spout	K-T195
10-1/4″ (26 cm) length, 3/4″ OD spout	K-T197
13-1/4″ (33.7 cm) length spout	K-T199
Lever handle is ADA compliant. **ADA**	
*K-307-K wall-mount valve is required.	

Required accessory:		
Wall-mount valve	K-307-K	not shown

Installation Notes

Install this product according to the installation guide.

Install the wall-mount valve according to the valve installation guide.

A total of two 1-7/8″ D. cut-out holes are required, one for the spout and one for the handle.

Fixture dimensions are nominal and conform to tolerances of ASME/ANSI standard A112.18.1.

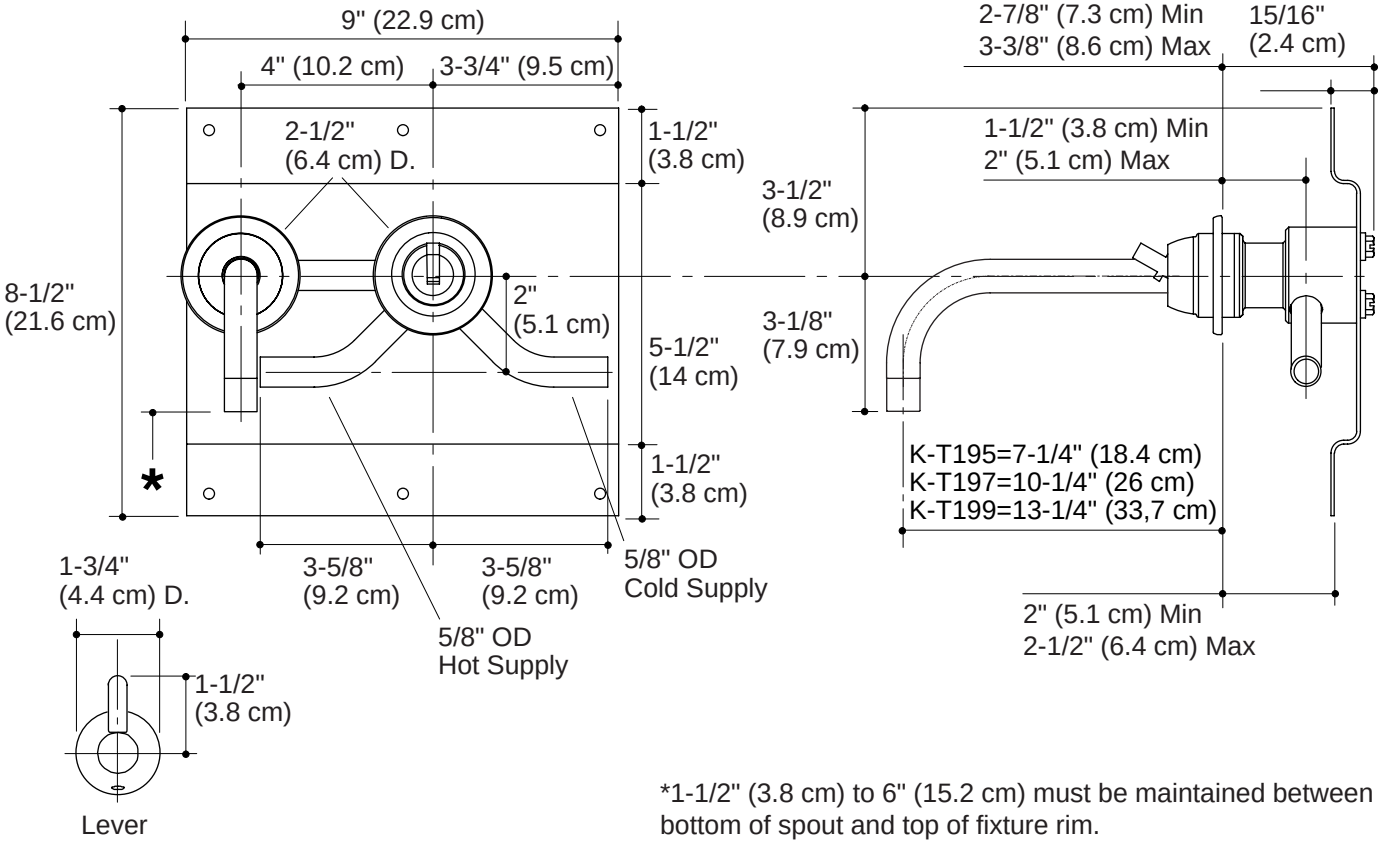

*1-1/2" (3.8 cm) to 6" (15.2 cm) must be maintained between bottom of spout and top of fixture rim.